SMA

Stands on its own

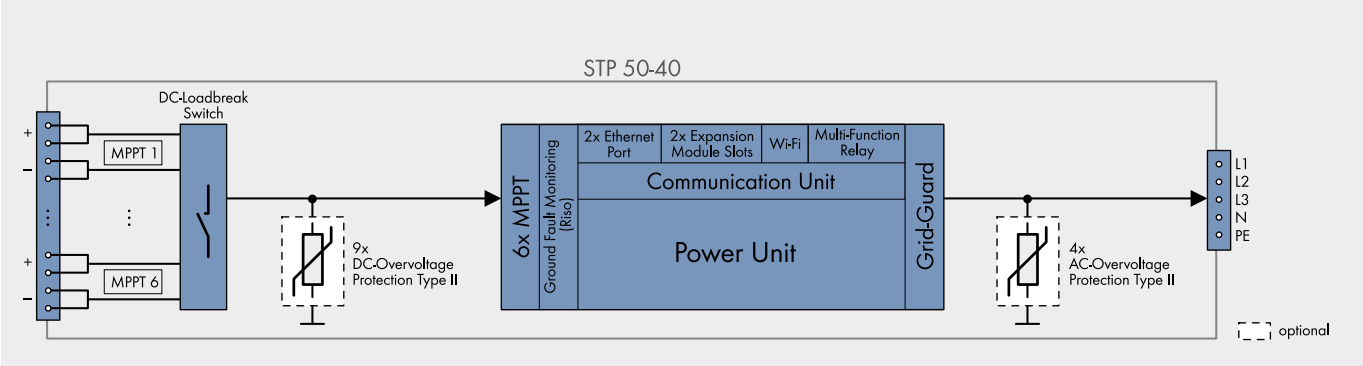
STP 50-40
DC-Loadbreak Switch
MPPT 1
MPPT 6
9x DC-Overvoltage Protection Type II
6x MPPT
Ground Fault Monitoring (Riso)
2x Ethernet Port
2x Expansion Module Slots
Wi-Fi
Multi-Function Relay
Communication Unit
Power Unit
Grid-Guard
4x AC-Overvoltage Protection Type II
L1
L2
L3
N
PE
optional

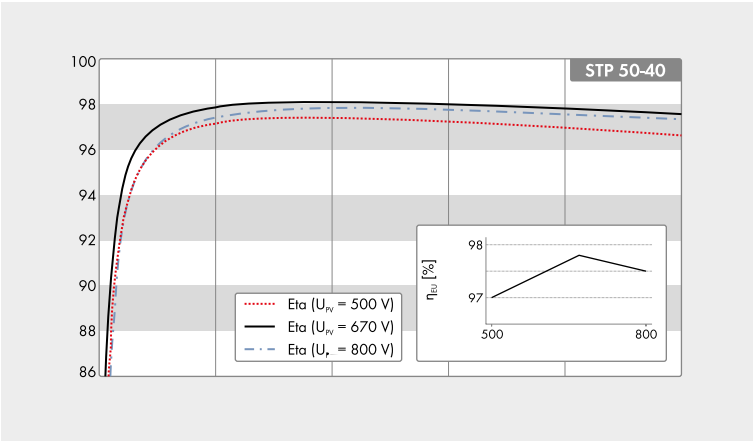
STP 50-40
100
98
96
94
92
90
88
86
Eta (U_PV = 500 V)
Eta (U_PV = 670 V)
Eta (U_PV = 800 V)
η_EU [%]
98
97
500
800